PRODUCT DWG. NO. S-2220 ~~F.R. 15~~	REMINGTON ARMS CO., INC. U M C BRIDGEPORT WORKS
MAIN TITLE	.22 LONG KLEANBORE
SUB TITLE	R.F. CARTRIDGE

SUPD'S DWG. NO.	F.R. 15 SUB 10	SCALE	4 to 1	APP'D	5-5-31	J.H.C.
DRAWN	4-27-31	~~E.L.H.~~	TRACED 4-27-31	~~E.L.H.~~	APP'D 5-6-31	[signature]
CHECKED	5-4-31	F.K.	APP'D 5-4-31	J.F.W.	APP'D	

COMPONENTS	DRAWING	SIMILAR PRODUCTS
SHELL GLDG. BRASS	S-2220 S-2226	~~.22 LONG HOL. PT. KBR. GLDG.~~ ~~.22 " " " LES.~~
BULLETS		~~.22 " LES. GLDG.~~ ~~.22 " HI-SP. LUB. KBR. BRASS~~
REGULAR	B-2203 ~~F.R. 1383~~	~~.22 " " KBR. K'KOTE. "~~ ~~.22 " " HOL. PT. LUB. KBR~~
~~HI-SP. LUB.~~	~~B-2203 F.R. 1383~~	~~.22 " " " " KBR. K'KOTE. BRASS~~ ~~.22 " KBR. K'KOTE. GLDG.~~
~~" KLEANKOTE~~	~~B-2203 F.R. 1383~~	~~.22 " HOL. PT. KBR. K'KOTE. GLDG.~~
~~HI-SP. LUB. HOL. PT.~~	~~B-2206 F.R. 13~~	~~PETERS - .22 LONG RUST FILMKOTE GLDG.~~ ~~" .22 " H.V. RUST. " BRASS~~
~~" K'KOTE. " "~~	~~B-2206 F.R. 13~~	~~" .22 " HOL. PT. " " GLDG.~~ ~~" .22 " H.V. HOL. PT. RUST. FK. BRASS~~
SOLID PT.	B2203	.22 LONG HI-SP. KLEANBORE LUB. PETERS - .22 LONG H.V. RUST. LUB.
HOL. PT. EXPORT ONLY	B2206	.22 LONG HI-SP. HOL. PT. KBR. LUB.
		P-22LG. H.V. H.P. RUST LUB.

RECORD OF [illegible]RATIONS			
11	KBR. SILVADRY & KBR. SILVADRY HOL. PT. ADDED TO USES		
12	F.R. NO. CHANGED HOL. PT. LES. OBSOLETE 6/6/33 SH.	13	LOCATION OF BULLET GROOVE WAS CHANGED 12-11-31
NEVER CHANGED ON DWG. 11-14-35 SH.		14	PETERS PRODUCT ADDED.
SILVADRY CHANGED TO KLEANKOTE 5/5/36 SH		15	.6125 .6065
WAS .612 .607 11/8/37 SH		16	.042 .037 WAS .044 .039
6/14/38 SH.	17	.226 .224 (DIA. UNDER HEAD) AND .226 .2245	
(MOUTH OF SHELL) CHANGED TO 11/10/38 .2258 TO CORRECT RECORDS.			
18	SHELL COMPONENT WAS S-2220 ONLY 4/23/39 CDR		
19	.225-.223 WAS .224-.221 CCB	20	56602 REMOVED ALL SIMILAR
PROD & ADDED HI SP. KBR LUB, P - H.V. RUST LUB - REMOVED P. HD. STAMP 1-9-45 NHG/EO			
21	59015 ADDED HOL. PT. & PETERS - H.V. H.P. 11-1-45 R.B.B.O.	22	63513.222 WAS .223
.2630 WAS .2685 6-7-50 J.L./E.O.			

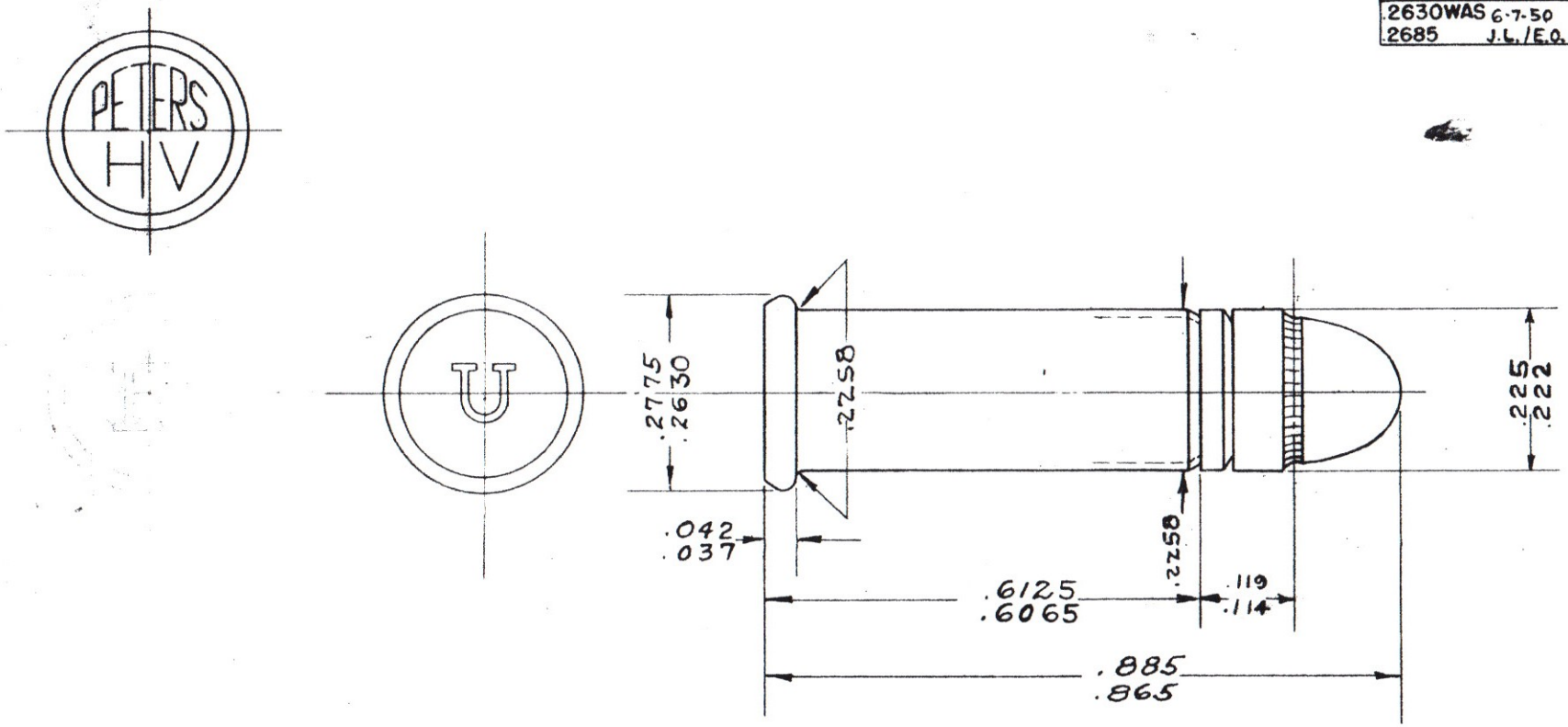

PRINTED ON "IMPERIAL" TRACING CLOTH