PRODUCT VG. C-2245	REMINGTON ARMS CO., INC U M C BRIDGEPORT WORKS	COMPONENTS		SIMILAR PRODUCTS	RECORD OF AL ATIONS
MAIN TITLE .22 LONG RIFLE PALMA KLEANBORE		SHELL-~~GLDG~~	~~S2245~~	PETERS-.22 L.R. DEWAR MATCH LUB. GLDG.	1 .042 .037 WAS .044 .039 6-14-38 CBH 2 REMINGTON TARGETMSTR
LUBRICATED		BULLET	B2245	.22 L.R. TARGETMASTER LUB.	AND PETERS POLICE 12/24/38 MATCH ADDED TO USES JK H 3 56605 ADDED
SUB TITLE R.F. CARTRIDGE (MATCH)		SHELL-BRASS	S2226	PETERS-.22 L.R. POLICE MATCH LUB.	(MATCH) TO S.T. S2245 WAS S2220 S2274 WAS S2226 1-5-45 HHG/E.O.
					4 59053 ADDED LUB. TO M.T. & P. 22 L.R. POL. MATCH-REMV'D GROOVE, 1/16 AP, .020-.015, .010 R. & BRASS FROM TARGETMASTER & POL. MATCH 6-13-46 H.G./E.O.
SUPD'S USE ON DWG. NO. C2236 SUB. 25	SCALE 5 TO 1	APP'D 1-28-38	J.F.W.		5 56649A S-2226 WAS S-2274 REMOVED "GLDG. S-2245" 3-5-47 R.B.B.o.
DRAWN 1-6-38 E.C.O.	TRACED 1-6-38 E.C.O.	APP'D			6 63459 REMOVED KNURL & ADDED 45° GROOVE 12-22-48 J.G./E.O.
CHECKED	APP'D 1-7-38 F.K.	APP'D			7 63494 .995 WAS .998 .985 WAS .988 12-21-49 N.C./E.O.

DO NOT SCALE THIS DRAWING: WORK TO FIGURES

DEC 27 1949

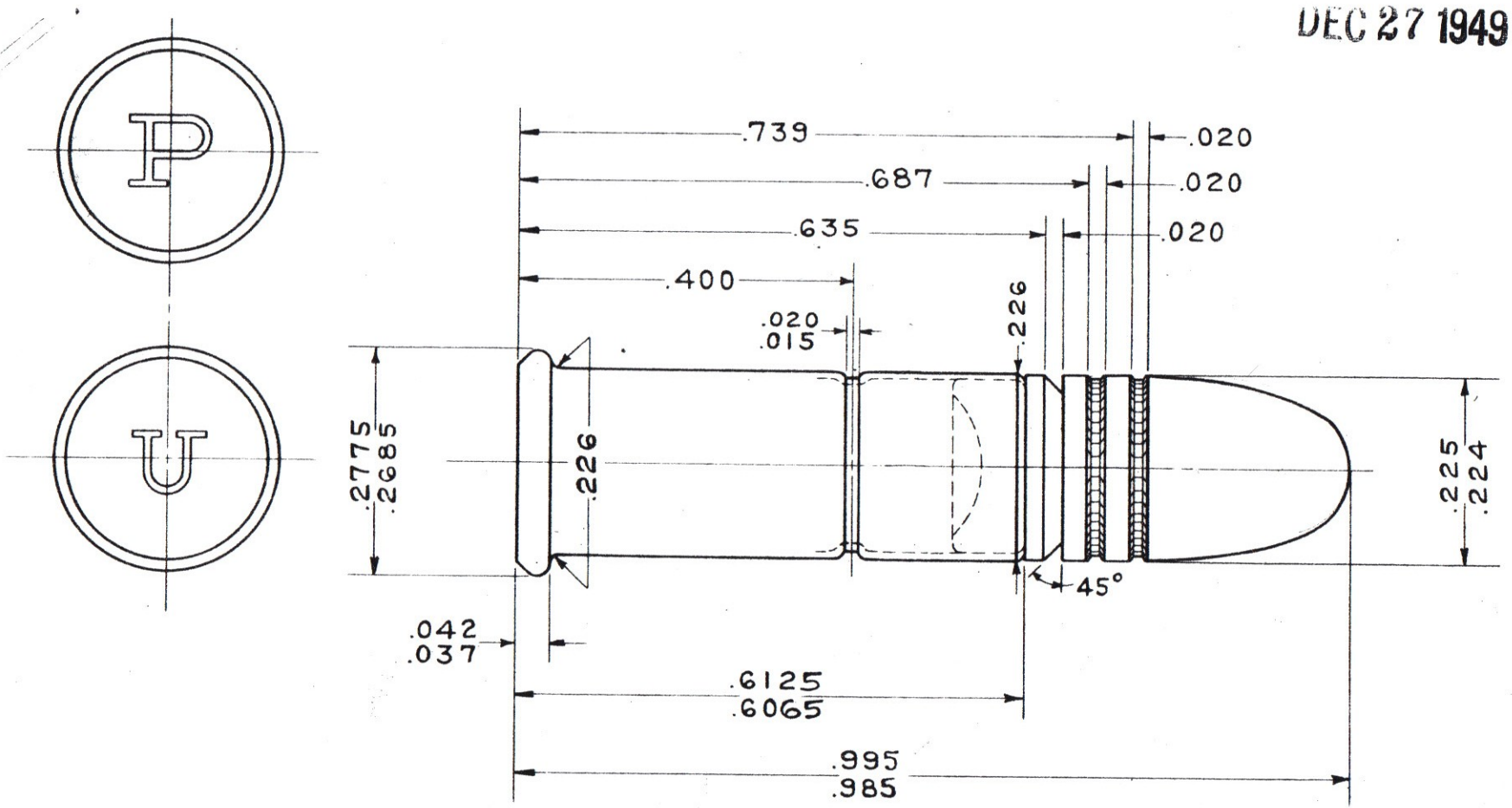

MC Bpt. Form No. 3061

PRINTED ON